1535 & 1545 LOW PROFILE GRAINBELT CONVEYORS

PARTS LIST

SERIAL NOS. 79600 - 81399

1535 LOW PROFILE CONVEYOR ASSEMBLY - GRAIN BELT CONVEYOR
SERIAL NOS. 79600- 81399

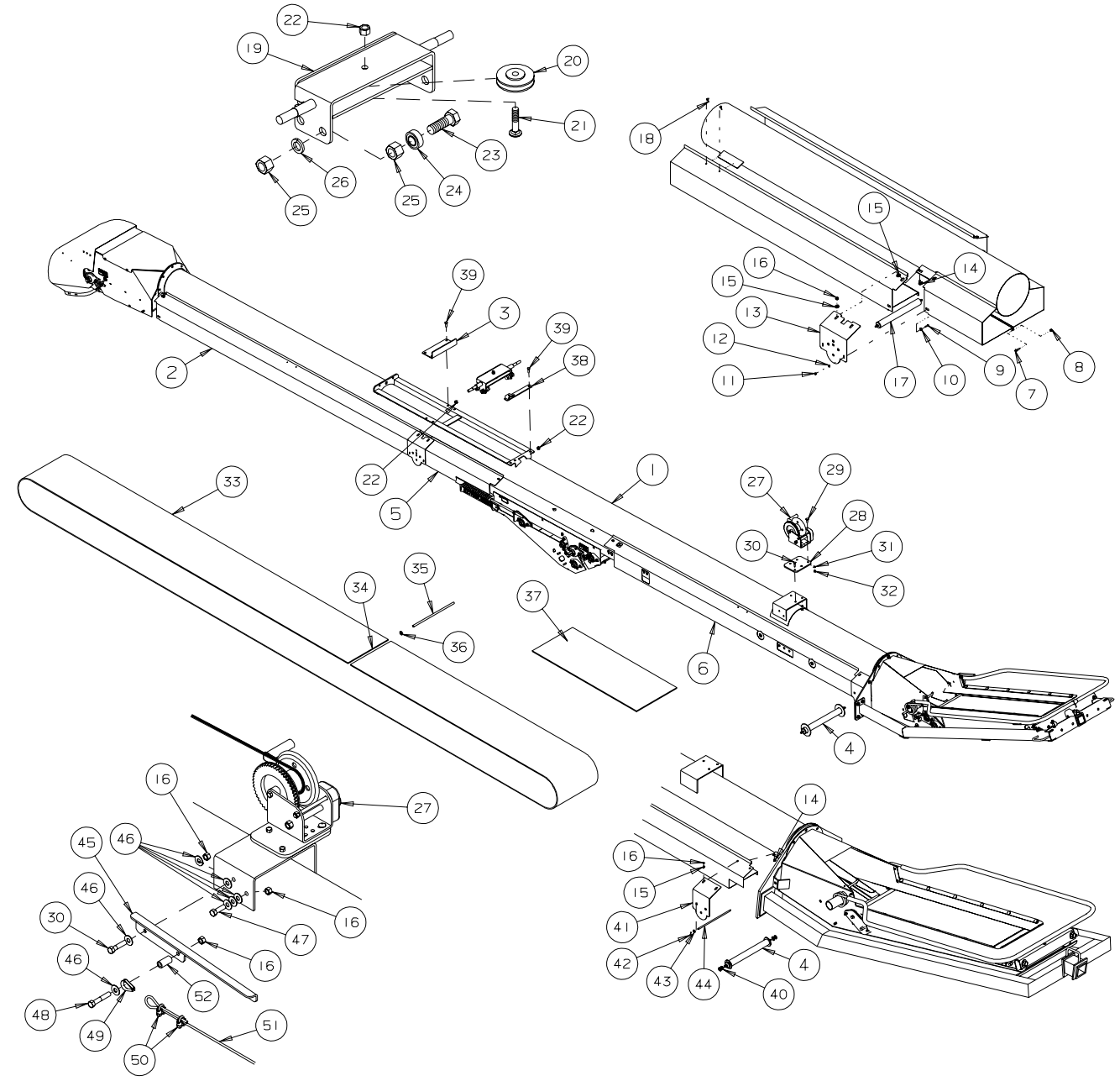

REF #	PART #	DESCRIPTION
1	C206972	35’ TUBE WELDMENT
2	C201909	UPPER WIND GUARD - LEFT - 35’ - 118” LG.
NS	C201909M	UPPER WIND GUARD - RIGHT - 35’ - 118” LG.
3	C203106	TRANSPORT STOP
4	C200795	GUIDE ROLLER
5	C206879	CENTRE GAS WIND GUARD - LEFT - 35’ - 34” LG.
NS	C206879M	CENTRE GAS WIND GUARD - RIGHT - 35’ - 34” LG.
6	C201891	LOWER GAS WIND GUARD - LEFT - 35’ - 119” LG.
NS	C201891M	LOWER GAS WIND GUARD - RIGHT - 35’ - 119” LG.

REF #	PART #	DESCRIPTION
7	B001001	BOLT, 1/4” x 1/2” UNC GR5 PLT
8	B001124	LOCKNUT, 1/4” NYLOCK GR5
9	B001420	SCREW #10-24 x 3/4” L PANHEAD,SS
10	B027497	SHOULDER WASHER
11	B0011205	LOCKNUT, #10-24 NYLOCK
12	B0011459	FLATWASHER, #10
13	C200608	ROLLER BRACKET
14	B001082	CARRIAGE BOLT, 3/8” x 1”
15	B0011495	WASHER-SAE, 3/8”
16	B0011325	LOCKNUT 3/8” STOVER
17	B021250	ROLLER, 1.9” OD x 18”
18	B002036	#10 x 5/8” TEK SCREW
19	C200856	TRACK SLIDE
20	B394712	3” CABLE SHEAVE - 1/2” BORE
21	B001092	CARRIAGE BOLT- 1/2” x 2 1/2”
22	B001136	1/2” LOCK NUT
23	B001101	3/4” x 2 1/2” BOLT
24	B017255	BEARING - 6203-3/4-2RS
25	B001142	3/4” HEX NUT
26	B001172	3/4” LOCK WASHER
27	B030200	BRAKE WINCH - 1500 LBS.
28	C201244	WINCH PLATE
29	B0010835	3/8”x 1 1/4” CARRIAGE BOLT
30	B001025	3/8”x 1 1/4” BOLT
31	B001165	3/8” LOCK WASHER
32	B001131	3/8” HEX NUT
33	B0186365	PVC BELT - 15” x 78’ - 10”, LACED
33	B0186355	RUBBER BELT - 15” x 78’ - 10”, LACED
34	B021321	ALLIGATOR LACING - 15” c/w PIN
35	C200652	ALLIGATOR LACING PIN ONLY - 15”
36	B021921	PIN RETAINING WASHER
NS	C204584	15” LACING PIN KIT
37	B018611	PVC BELT - 15” WIDE x 10’ - LACED
37	B018612	RUBBER BELT - 15” WIDE x 10’ - LACED
37	B018613	PVC BELT - 15” WIDE x 20’ - LACED
37	B018614	RUBBER BELT - 15” WIDE x 20’ - LACED
38	C201964	TRACK STOP
39	B001040	1/2” x 1 1/4” BOLT
40	B001157	3/4” SAE FLATWASHER
41	C201973	ROLLER BRACKET
42	B0020485	1/8” x 1” COTTER PIN
43	B001151	1/2” FLATWASHER
44	C200792	GUIDE PIN
45	C206020	HOPPER HANDLE
46	B001149	3/8” FLATWASHER
47	B001024	3/8”x 1” BOLT
48	B001031	3/8”x 1 1/2” BOLT
49	B008060	3/16” CABLE THIMBLE
50	B008061	3/16” CABLE CLAMP
51	B008405	3/16” CABLE x 14’- 7”
52	B002310	SPACER- 5/8” OD x .512” ID x 1” LONG

1545 LOW PROFILE CONVEYOR ASSEMBLY - GRAIN BELT CONVEYOR
SERIAL NOS. 79600 - 81399

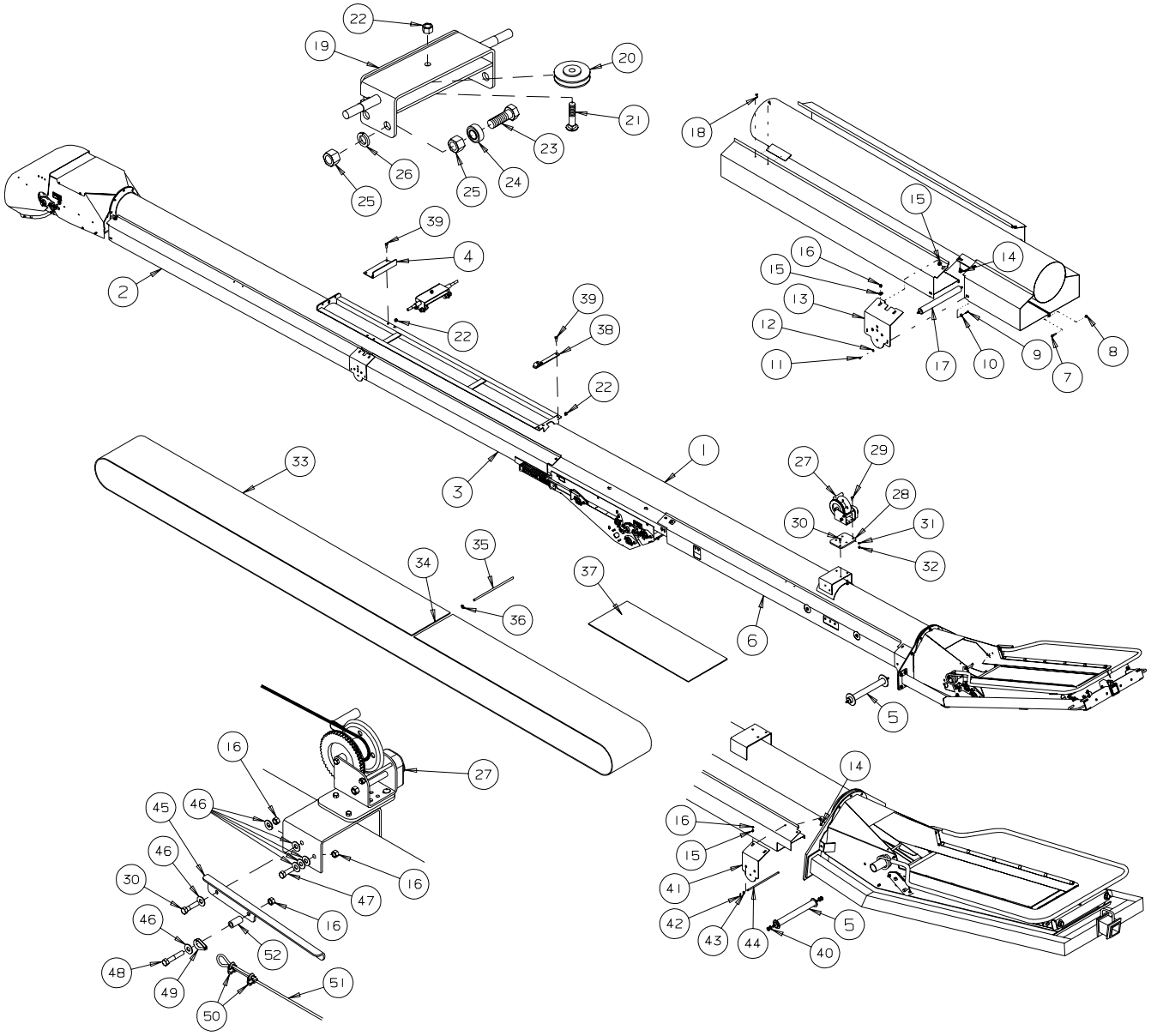

REF #	PART #	DESCRIPTION
1	C206848	45’ TUBE WELDMENT
2	C201899	UPPER WIND GUARD - LEFT - 45’ - 133 3/8” LG.
NS	C201899M	UPPER WIND GUARD - RIGHT - 45’ - 133 3/8” LG.
3	C206978	CENTRE WIND GUARD - LEFT - 45’ - 116 3/8” LG.
NS	C206978M	CENTRE WIND GUARD - RIGHT - 45’ - 116 3/8” LG.
4	C203106	TRANSPORT STOP
5	C200795	GUIDE ROLLER
6	C201977	LOWER WIND GUARD - LEFT - 45’ - 141 5/8” LG.
NS	C201977M	LOWER WIND GUARD - RIGHT - 45’ - 141 5/8” LG.
7	B001001	BOLT, 1/4” x 1/2” UNC GR5 PLT
8	B001124	LOCKNUT, 1/4” NYLOCK GR5

REF #	PART #	DESCRIPTION
9	B001420	SCREW #10-24 x 3/4” L PANHEAD,SS
10	B027497	SHOULDER WASHER
11	B0011205	LOCKNUT, #10-24 NYLOCK
12	B0011459	FLATWASHER, #10
13	C200608	ROLLER BRACKET
14	B001082	CARRIAGE BOLT, 3/8” x 1”
15	B0011495	WASHER-SAE, 3/8”
16	B0011325	LOCKNUT 3/8” STOVER
17	B021250	ROLLER, 1.9” OD x 18”
18	B002036	#10 x 5/8” TEK SCREW
19	C200856	TRACK SLIDE
20	B394712	3” CABLE SHEAVE - 1/2” BORE
21	B001092	CARRIAGE BOLT- 1/2” x 2 1/2”
22	B001136	1/2” LOCK NUT
23	B001101	3/4” x 2 1/2” BOLT
24	B017255	BEARING - 6203-3/4-2RS
25	B001142	3/4” HEX NUT
26	B001172	3/4” LOCK WASHER
27	B030200	BRAKE WINCH - 1500 LBS.
28	C201244	WINCH PLATE
29	B0010835	3/8”x 1 1/4” CARRIAGE BOLT
30	B001025	3/8”x 1 1/4” BOLT
31	B001165	3/8” LOCK WASHER
32	B001131	3/8” HEX NUT
33	B0186385	PVC BELT - 15” x 98’ - 10”, LACED
33	B0186375	RUBBER BELT - 15” x 98’ - 10”, LACED
34	B021321	ALLIGATOR LACING - 15” c/w PIN
35	C200652	ALLIGATOR LACING PIN ONLY - 15”
36	B021921	PIN RETAINING WASHER
NS	C204584	15” LACING PIN KIT
37	B018611	PVC BELT - 15” WIDE x 10’ - LACED
37	B018612	RUBBER BELT - 15” WIDE x 10’ - LACED
37	B018613	PVC BELT - 15” WIDE x 20’ - LACED
37	B018614	RUBBER BELT - 15” WIDE x 20’ - LACED
38	C201964	TRACK STOP
39	B001040	1/2” x 1 1/4” BOLT
40	B001157	3/4” SAE FLATWASHER
41	C201973	ROLLER BRACKET
42	B0020485	1/8” x 1” COTTER PIN
43	B001151	1/2” FLATWASHER
44	C200792	GUIDE PIN
45	C206020	HOPPER HANDLE
46	B001149	3/8” FLATWASHER
47	B001024	3/8”x 1” BOLT
48	B001031	3/8”x 1 1/2” BOLT
49	B008060	3/16” CABLE THIMBLE
50	B008061	3/16” CABLE CLAMP
51	B008405	3/16” CABLE x 14’- 7”
52	B002310	SPACER- 5/8” OD x .512” ID x 1” LONG

LOW PROFILE INTAKE - 1535 & 1545 GRAIN BELT CONVEYOR
SERIAL NOS. 79600 - 81399

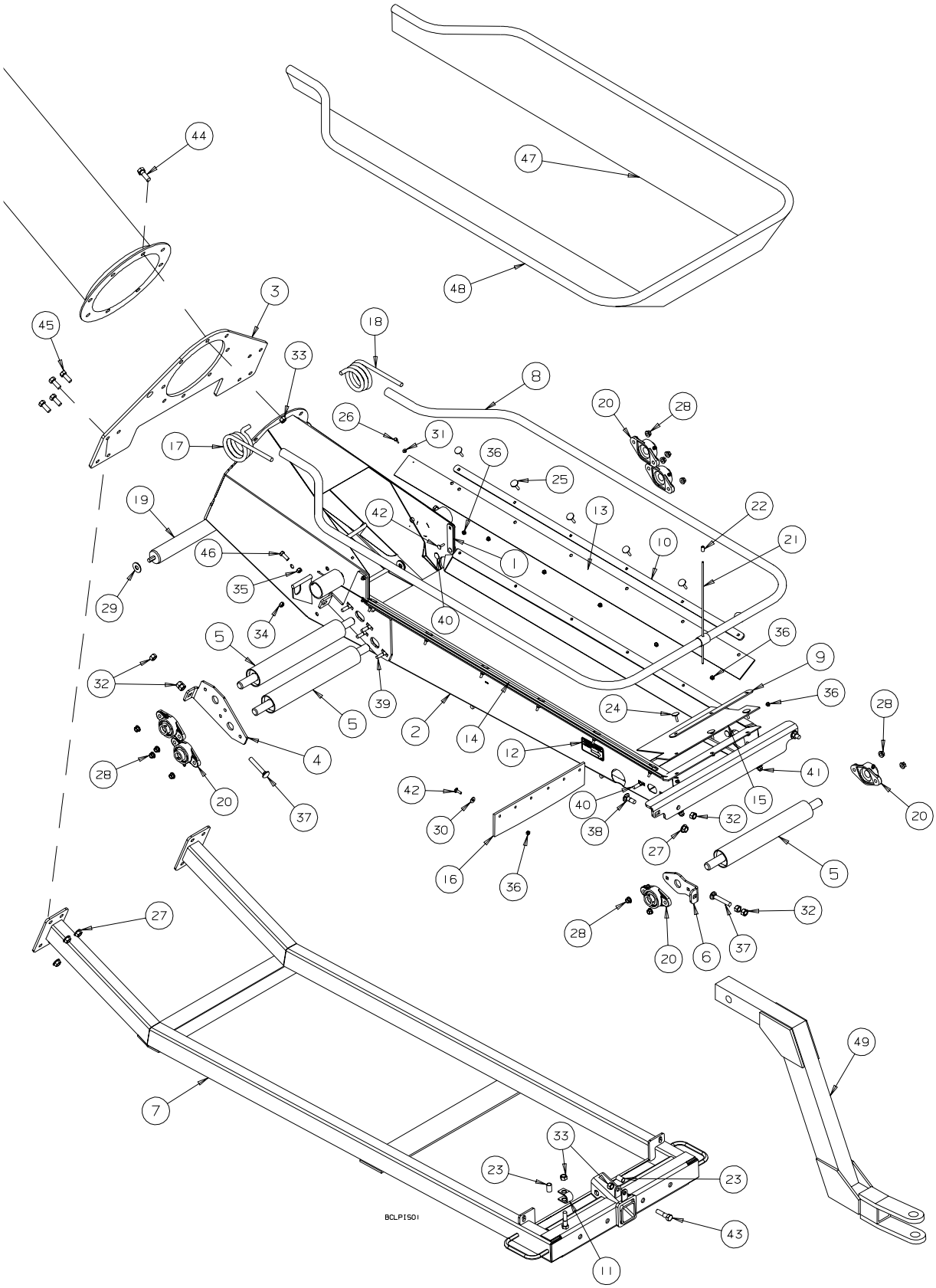

REF #	PART NO.	DESCRIPTION
1	C206796	Hopper Flap
2	C206742	Low Profile Hopper Weldment
3	C206344	Flange Hitch Plate
4	C206319	Roller Cap Adjust
5	C206030	2 1/2” Transfer Roller
6	C206019	Low Profile Adjustment Plate
7	C205345	Field Loader Hitch
8	C200794	Transfer Hopper Rail
9	C200632	Rear Fabric Strap
10	C200631	20” Transfer Fabric Strap
11	B598473	Latch C-Clamp
12	B029450	Right Tracking Decal
13	B027539R	Right Transfer Flashing
14	B027539L	Left Transfer Flashing
15	B027526	Rear Transfer Hopper Flashing
16	B027518	Transfer Dozer Flashing
17	B021740L	Hopper Spring - Left
18	B021740R	Hopper Spring - Right
19	B021257	1.9” OD Roller x 15 1/8”
20	B017050	1” Bearing - 2 Bolt
21	B008405	3/16” Cable x 14’-7”
22	B008059	3/16” Aluminum Swage Sleeve
23	B002310	Spacer- 5/8” OD x .512” ID x 1” long
24	B002226	1/4”x 1” Elevator Bolt
25	B002225	1/4”x 1 1/4” Elevator Bolt
26	B002036	#10 x 5/8” TEK Screw
27	B001409	1/2” Serrated Flange Nut
28	B001405	3/8” Serrated Flange Nut
29	B001151	1/2” Flatwasher
30	B001147	1/4” Flatwasher
31	B0011459	#10 Flatwasher
32	B001135	1/2” Hex Nut
33	B001134	1/2” Stover Lock Nut
34	B0011325	3/8” Stover Lock Nut
35	B001131	3/8” Hex Nut
36	B001124	1/4” Lock Nut
37	B001091	1/2”x 3” Carriage Bolt - Full Thread
38	B001088	1/2”x 1 1/2” Carriage Bolt
39	B001084	3/8”x 1 3/4” Carriage Bolt
40	B001083	3/8”x 1 1/2” Carriage Bolt
41	B001082	3/8”x 1” Carriage Bolt
42	B001080	1/4”x 1” Carriage Bolt
43	B001044	1/2”x 2” Bolt
44	B001042	1/2”x 1 1/2” Bolt
45	B001040	1/2”x 1 1/4” Bolt
46	B001124	3/8”x 1” Bolt
47	B021421	Transfer Hopper Fabric
48	B024082	1” ID x 140” Flexible Conduit
49	C205544	Offset Hitch

DISCHARGE ASSEMBLY - GRAIN BELT CONVEYOR
SERIAL NOS. 79600 - 81399

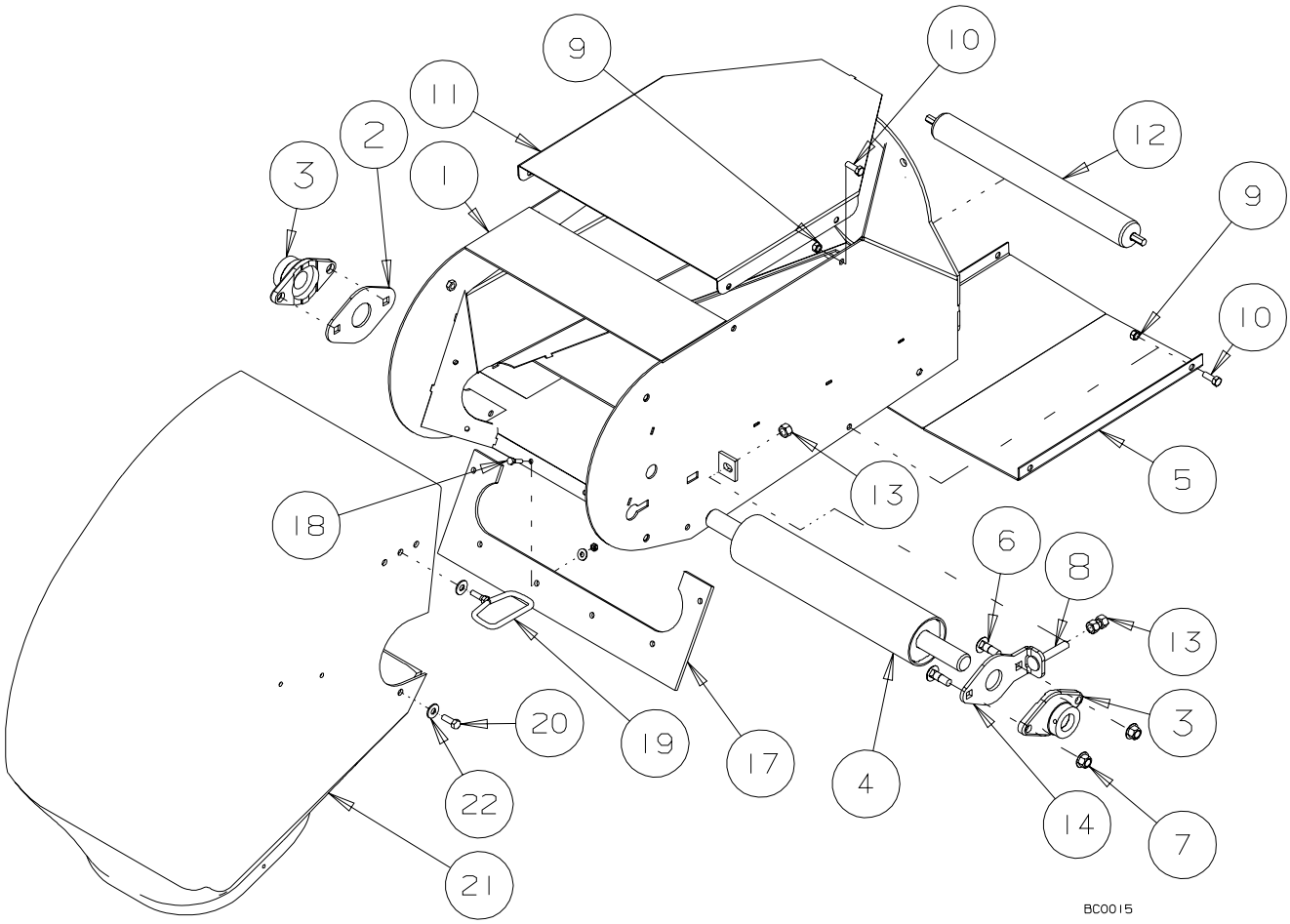

REF #	PART #	DESCRIPTION
1	C200717H	DISCHARGE 65', 75'
2	C200609	BEARING PLATE
3	B0172015	BEARING, 1 1/4” - 2 BOLT FLANGE INA
4	C206016	ROLLER, 3 1/2” x 16 1/2”
5	C200605	DISCHARGE BOTTOM GUARD
6	B0010885	CARRIAGE BOLT, 1/2” x 1 1/2”, SHORT NECK
7	B001409	1/2” SERRATED FLANGE NUT
8	B001091	CARRIAGE BOLT, 1/2” x 3”
9	B0011325	LOCKNUT, 3/8” STOVER
10	B001024	BOLT, 3/8” x 1” UNC GR5 PLT.
11	C200644	DISCHARGE CAP MAIN
12	B021250	ROLLER, 1.9" OD x 18"
13	B001135	NUT, 1/2” HEX
14	C200615	SHAFT GUARD - 1.25"
15	B001124	LOCKNUT, 1/4” NYLOCK GR5
16	B001147	FLATWASHER, 1/4”
17	B027519	WIPER, DISCHARGE, 2 PLY RUBBER
18	B001003	BOLT, 1/4” x 1” UNC GR5 PLT
19	C200797	DISCHARGE HANDLE
20	B001024	BOLT, 3/8” x 1” UNC GR5 PLT
21	B027600	DISCHARGE SPOUT, 10" TUBE
22	B001149	FLATWASHER, 3/8”

S DRIVE ASSEMBLY - GRAIN BELT CONVEYOR
SERIAL NOS. 79600 - 81399

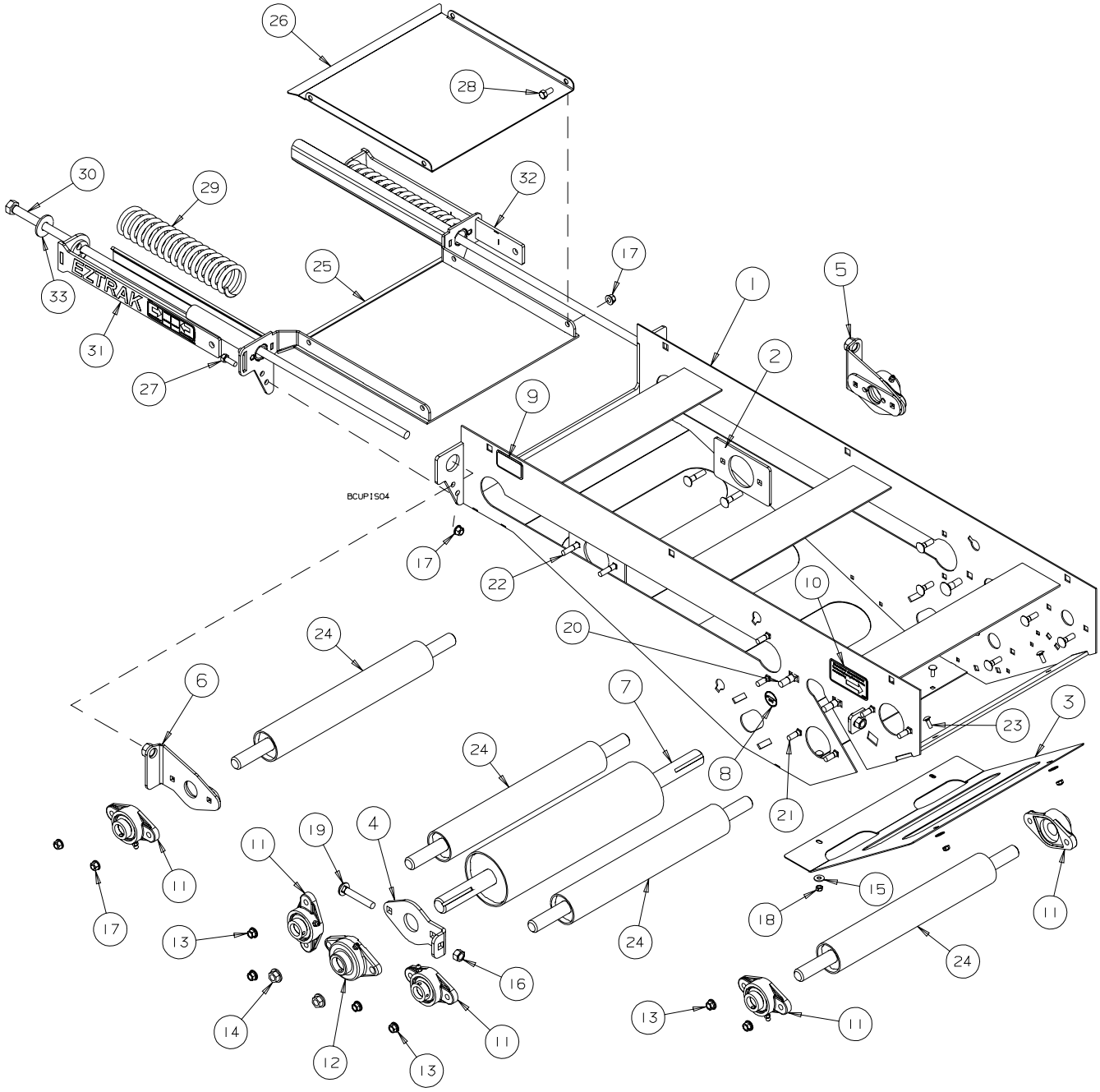

REF #	PART #	DESCRIPTION
1	C206845	SMALL S-DRIVE BODY WELDMENT
2	C206636	BACK PLATE
3	C206316	SMALL S-DRIVE GUARD
4	C200615	SHAFT GUARD - 1.25”
5	C2060002L	SMALL S-DRIVE SDJUSTER - LEFT
6	C2060002R	SMALL S-DRIVE SDJUSTER - RIGHT
7	C200846	5” DIA DRIVE ROLLER - KEYED
8	B029950	GREASE DECAL - 8 HRS
9	B029494	SMALL PATENT PENDING DECAL
10	B029450	RIGHT TRACKING DECAL
11	B017050	1” DIA BEARING - 2 BOLT
12	B0172015	1 1/4” DIA BEARING - 2 BOLT
13	B001405	3/8” SERRATED FLANGE NUT
14	B001409	1/2” SERRATED FLANGE NUT
15	B001147	1/4” FLATWASHER
16	B001135	1/2” HEX NUT
17	B0011326	3/8” FLANGE LOCK NUT
18	B001124	1/4” LOCK NUT
19	B001091	1/2”x 3” CARRIAGE BOLT - FULL THREAD
20	B0010885	1/2”x 1 1/2” SHORT NECK CARRIAGE BOLT
21	B0010835	3/8”x 1 1/4” CARRIAGE BOLT
22	B001084	3/8”x 1 3/4” CARRIAGE BOLT
23	B0010499	1/4”x 3/4” CARRIAGE BOLT
24	C206847	UNLOAD TAKEUP ROLLER
25	C205587	LOWER S-DRIVE BELT GUIDE
26	C205144	UPPER S-DRIVE BELT GUIDE
27	B001024	3/8” x 1” BOLT
28	B001023	3/8” x 3/4” BOLT
29	B0210731	COMPRESSION SPRING - 2 1/2” OD x 16” LONG x .343” WIRE
30	B0026018	5/8”x 41 1/2” BOLT - FULL THREAD
31	C205594L	SPRING TENSION GUAGE - LEFT
32	C205594R	SPRING TENSION GUAGE - RIGHT
33	B001153	5/8” FLATWASHER

UNDERCARRIAGE ASSEMBLY - GRAIN BELT CONVEYOR
SERIAL NOS. 79600 - 81399

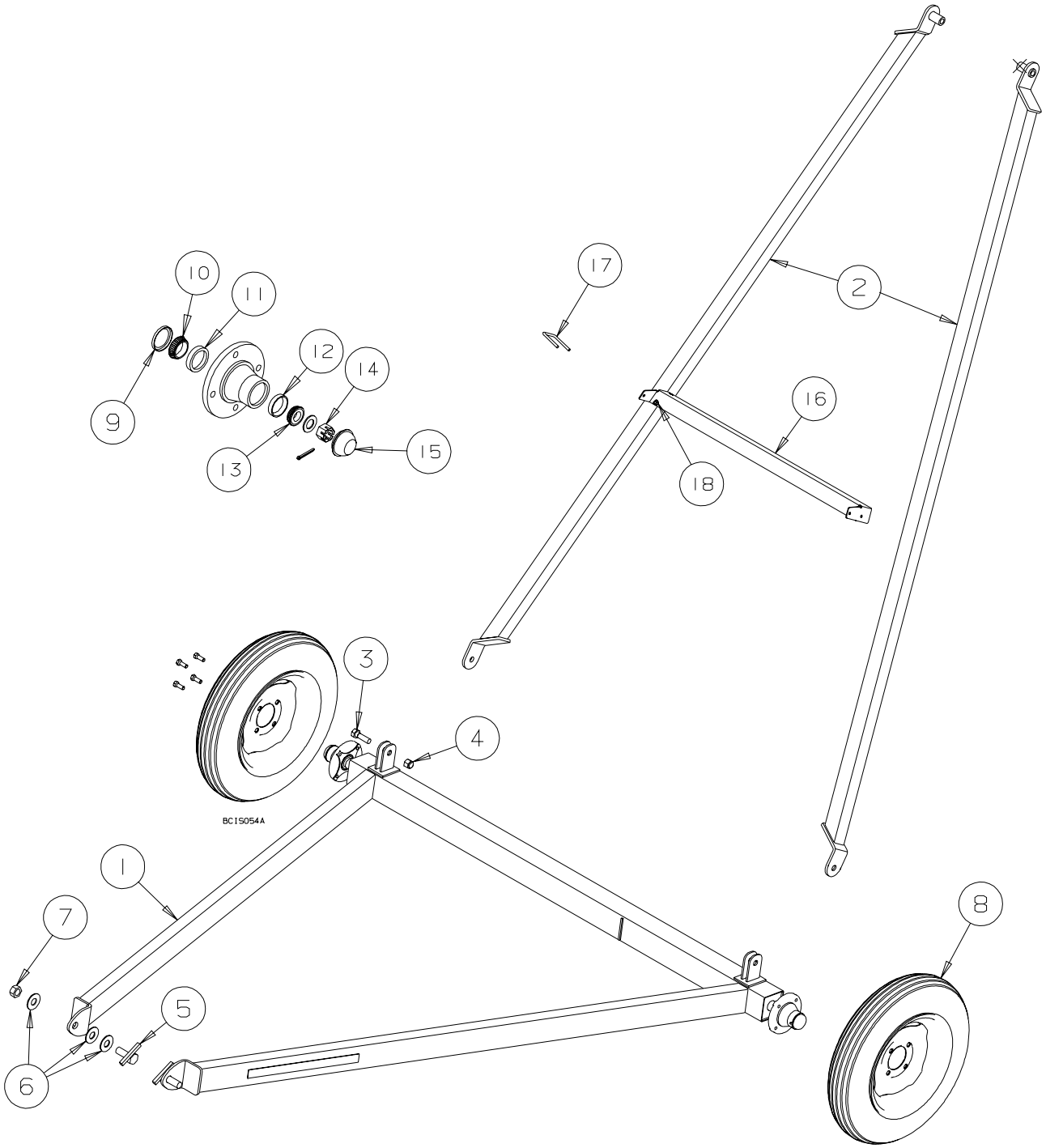

REF #	PART #	DESCRIPTION
1	C201970	35' AXLE FRAME WELDMENT
1	C200868	45' AXLE FRAME WELDMENT
2	C201971	35' A-FRAME ARM
2	C200860	45' A-FRAME ARM
3	B001101	3/4"x 2 1/2" BOLT
4	B001154	3/4" STOVER LOCK NUT
5	C200666	SUSPENSION BOLT
6	B001159	1" FLAT WASHER
7	B001075	1" STOVER LOCK NUT
8	B011205	15" TIRE & RIM ASSEMBLY
9	B011604	GREASE SEAL - 411 HUB
10	B011603	INNER BEARING - LM67048
11	B011602	INNER CUP - LM67010
12	B011600	OUTER CUP - LM11910
13	B011601	OUTER BEARING - LM11949
14	B011677	3/4" CASTLE NUT
15	B011500	DUST CAP - 411 HUB
16	C206024	35' A-FRAME CROSS BRACE
16	C206022	45' A-FRAME CROSS BRACE
17	B002011	5/16" x 2 1/2" SQ. U-BOLT
18	B0011275	5/16" STOVER LOCK NUT

ELECTRIC MOTOR DRIVE KIT - GRAIN BELT CONVEYOR
SERIAL NOS. 79600 - 81399

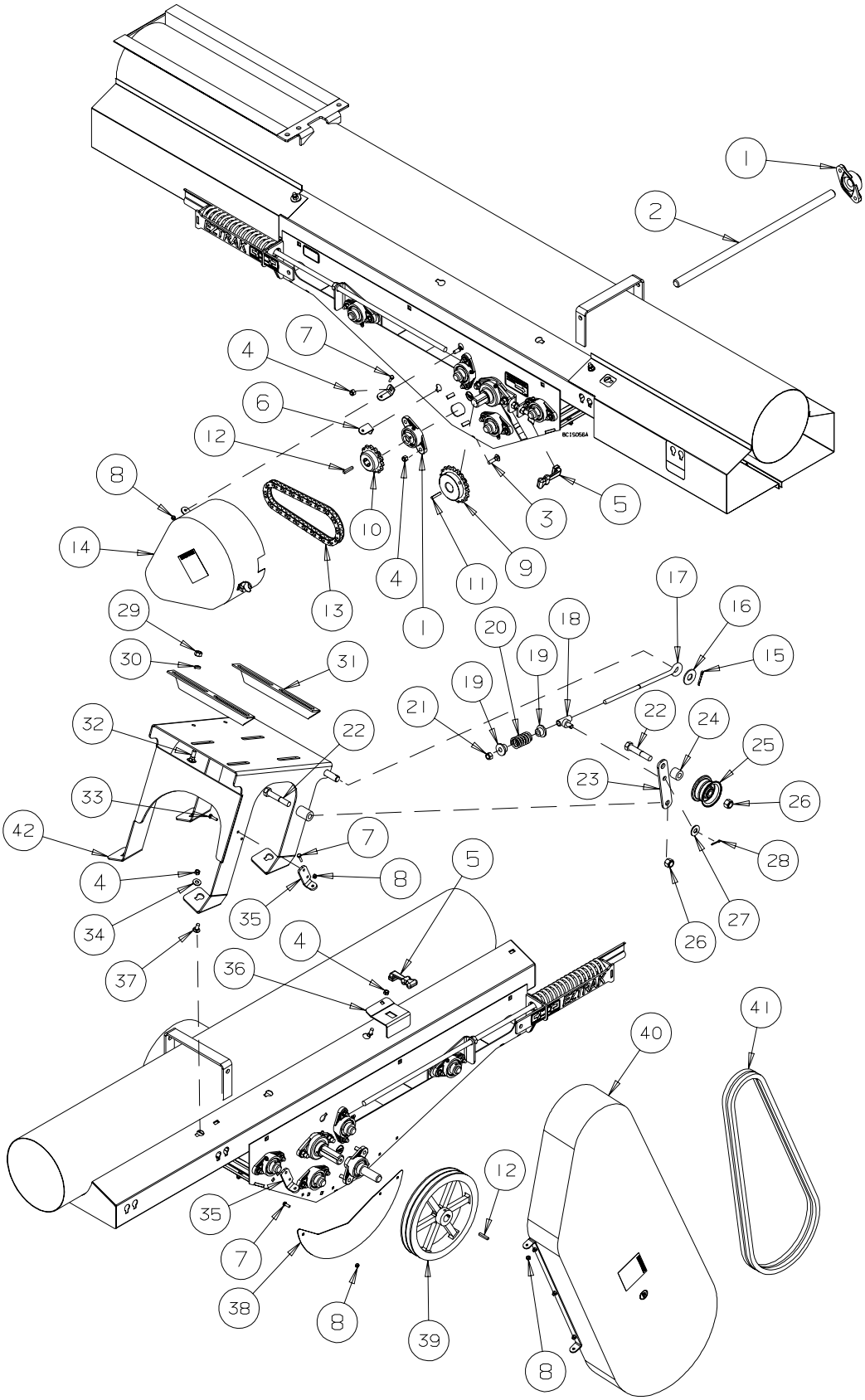

REF #	PART #	DESCRIPTION
1	B017050	1” DIA. BEARING - 2 BOLT
2	B011833	1” UNLOADER JACK SHAFT
3	B001083	3/8”x 1 1/2” CARRIAGE BOLT
4	B0011325	3/8” STOVER LOCK NUT
5	B0219992	RUBBER LATCH
6	C206025	HINGE MOUNT
7	B001002	1/4”x 3/4” BOLT
8	B001124	1/4” LOCK NUT
9	B0090105	60-19 SPROCKET x 1 1/4” BORE
10	B0090275	60-14 SPROCKET x 1” BORE
11	B194012	5/16” KEY x 1 1/2” LG.
12	B689169	1/4” KEY x 1 1/2” LG.
13	B0090135	R60 CHAIN x 37 PITCH
14	C206203	PLASTIC CHAIN GUARD ASSEMBLY
15	B002047	3/16”x 1 1/4” COTTER PIN
16	B001155	3/4” FLAT WASHER
17	B0020275	1/2” EYEBOLT x 12 5/8” LG.
18	B496521	BELT TENSIONER TUBE
19	B496735	SPRING CAP
20	B021082	COMPRESSION SPRING - 1.42” OD x 3.68” LG - .187” WIRE
21	B001134	1/2” STOVER LOCK NUT
22	B001073	5/8”x 3 1/2” BOLT
23	C201250	IDLER ARM
24	C201240	IDLER SPACER
25	B018044	IDLER PULLEY - 5/8” BORE
26	B001141	5/8” LOCK NUT
27	B001151	1/2” FLAT WASHER
28	B0020485	1/8”x 1” COTTER PIN
29	B001135	1/2” HEX NUT
30	B001167	1/2” LOCK WASHER
31	B695298	MOTOR MOUNT BRACKET
32	B0010875	1/2”x 1 1/4” CARRIAGE BOLT
33	B001003	1/4”x 1” BOLT
34	B001149	3/8” FLAT WASHER
35	C206214	GUARD HINGE
36	C206217	HINGE STOP BOTTOM
37	B001082	3/8”x 1” CARRIAGE BOLT
38	C206212	PULLEY COVER
39	B018032	2B12.0 PULLEY - 1” BORE
40	C201209	PLASTIC BELT GUARD
41	B0180673	B-96 BELT
42	C200853	MOTOR MOUNT - 35’, 45’

GAS ENGINE DRIVE KIT - GRAIN BELT CONVEYOR
SERIAL NOS. 79600 - 81399

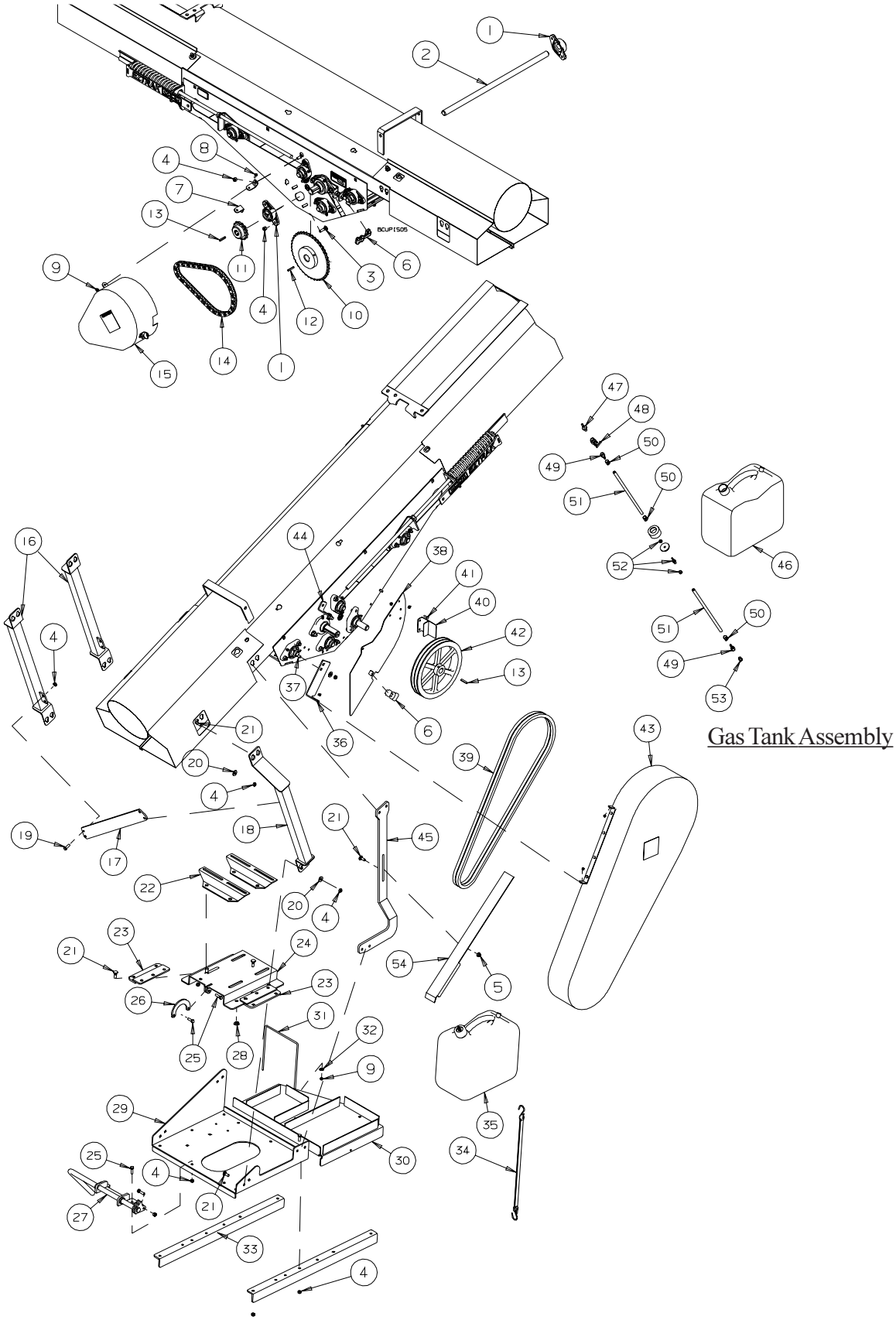

REF #	PART #	DESCRIPTION
1	B017050	1” DIA. BEARING - 2 BOLT
2	B011833	1” UNLOADER JACK SHAFT
3	B001083	3/8”x 1 1/2” CARRIAGE BOLT
4	B0011325	3/8” STOVER LOCK NUT
5	B0011326	3/8” LOCKING FLANGE NUT
6	B0219992	RUBBER LATCH
7	C206025	HINGE MOUNT
8	B001002	1/4”x 3/4” BOLT
9	B001124	1/4” LOCK NUT
10	B009257	60-40 SPROCKET x 1 1/4” BORE
11	B0090275	60-14 SPROCKET x 1” BORE
12	B194012	5/16” KEY x 1 1/2” LG.
13	B689169	1/4” KEY x 1 1/2” LG.
14	B0090145	R60 CHAIN x 51 PITCH
15	C206203	PLASTIC CHAIN GUARD ASSEMBLY
16	C200933	MOTOR ARM
17	C201205	ENGINE LINK
18	C200936	OFFSET MOTOR ARM
19	B001024	3/8”x 1” BOLT
20	B001149	3/8” FLAT WASHER
21	B0010835	3/8”x 1 1/4” CARRIAGE BOLT
22	B695298	MOTOR MOUNT BRACKET
23	C200935	MOTOR RAIL
24	C200937	MOTOR BASE
25	B001025	3/8”x 1 1/4” BOLT
26	C205593	MOTOR LINK
27	C205595	TENSION HANDLE
28	B027500	PLASTIC SLIDER BUSHING
29	C205934	ENGINE BASE
30	C206254	BATTERY/GAS TANK BASE
31	B002001	1/4”x 8 1/4” U-BOLT x 9 3/4” LG.
32	B001147	1/4” FLAT WASHER
33	C206253	BATTERY BASE RAIL
34	B021062	20” RUBBER TARP STRAP
35	C201276	GAS TANK - 5 GALLON
36	C206138	LONG GUARD HINGE
37	B0010819	3/8”x 3/4” CARRIAGE BOLT
38	C206141	SHEAVE COVER
39	B018075	B-82 BELT
40	C205140	BELT GUARD STOP
41	B001002	1/4”x 3/4” BOLT
42	B018032	2B12.0 PULLEY - 1” BORE
43	C205137	PLASTIC BELT GUARD
44	C206142	SHORT GUARD HINGE
45	C206252	MOTOR TORQUE ARM
46	B027419	Gasoline Container - 5 gal
47	B0280365	1/4” MPT x 1/4” HB Brass Fitting
48	B028210	1/4” NPT Brass Valve
49	B028212	1/4” FPT x 1/4” HB Brass Fitting
50	B024150	1/4” Hose Clamp
51	C205286	1/4” Polyurethane Gas Line x 15”
52	B0280835	1/4” Bulk Head Fitting - 1/4” HB both ends
53	B028211	1/4” MPT Bronze Breather Vent
54	C204152	Belt Rest

PTO DRIVE KIT - GRAIN BELT CONVEYOR
SERIAL NOS. 79600 - 81399

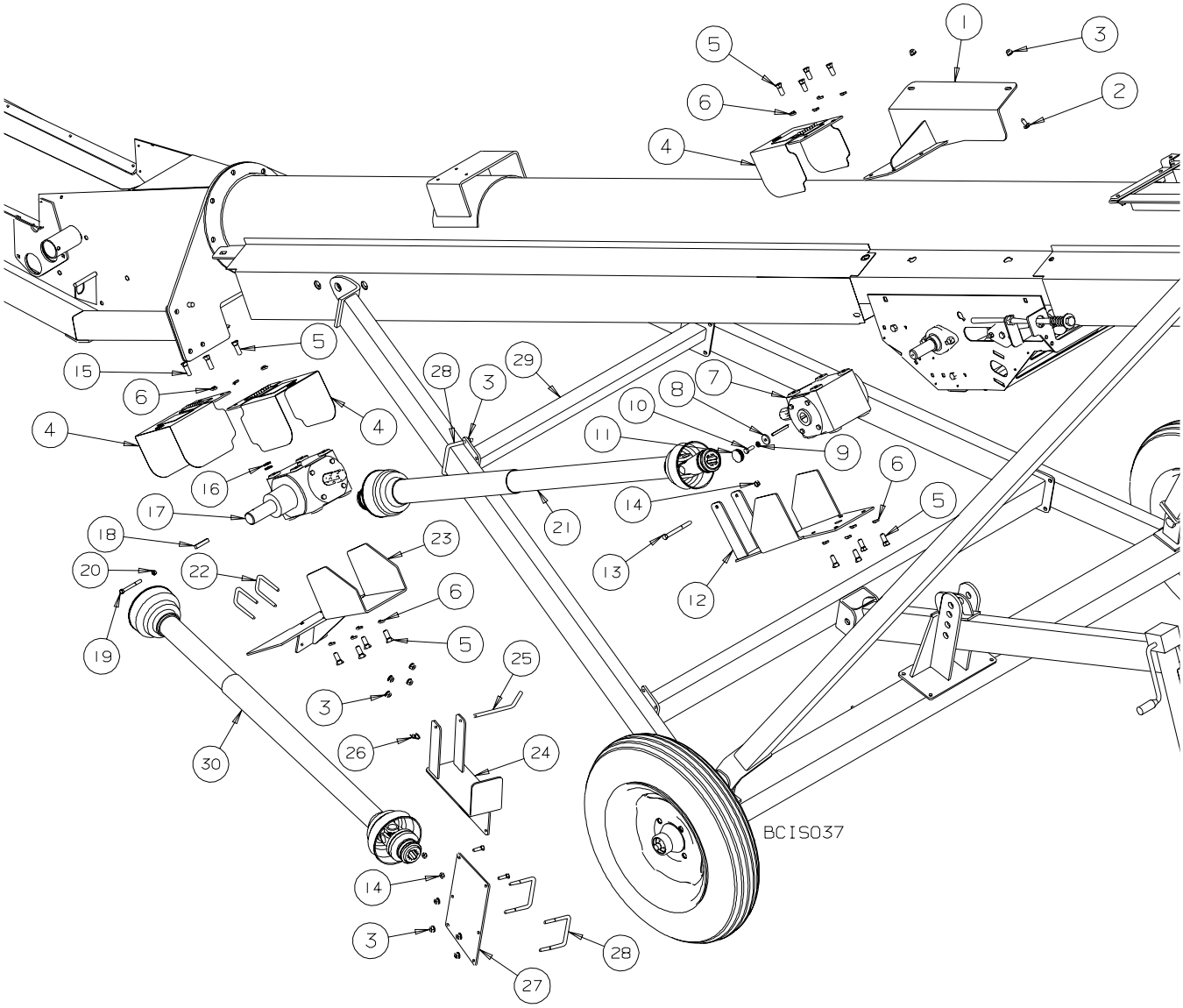

REF #	PART NO.	DESCRIPTION
1	C205584	Upper Gearbox Mount
2	B001082	3/8”x 1” Carriage Bolt
3	B0011326	3/8” Flange Lock Nut
4	C205651A	PTO Guard Assembly
5	B001039	1/2”x 1” Bolt
6	B001167	1/2” Lockwasher
7	B0030294	Upper Gearbox - 1:1
8	C205373	Key Stop Washer
9	B001165	3/8” Lockwasher
10	B001024	3/8”x 1” Bolt
11	B0281874	1 1/2” Plastic Plug
12	C205603	Upper Gearbox Lower Guard
13	B001035	3/8” x 4” Bolt
14	B0011325	3/8” Stover Lock Nut
15	B001040	1/2”x 1 1/4” Bolt
16	B001152	1/2” SAE Flatwasher
17	B0030295	Lower Gearbox - 1:1.3
18	C200649	3/8”x 2” Key
19	B001017	5/16”x 3” Bolt
20	B001127	5/16” Lock Nut
21	B0030605	Connecting PTO Shaft - 6 Spline both ends
22	B0020135	3/8”x 2” x 3” Sq. U-Bolt (1535 only)
22	B0020168	3/8”x 2 1/2” x 3 3/4” Sq. U-Bolt (1545 only)
23	C205585	Lower Gearbox Mount
24	C205586	PTO Shaft Holder
25	B496655	PTO Keeper Pin
26	B002094	.094” x 2 1/4” Hair Pin Clip
27	C205389	PTO Holder Extension
28	B0020162	3/8” x 4” x 3” Sq. U-bolt
29	C201306	35’ Torque Arm (1535 only)
29	C201255	45’ Torque Arm (1545 only)
30	B003060	Driving PTO Shaft - 6 Spline x 1 1/2” dia Bore

HYDRAULIC DRIVE KIT - GRAIN BELT CONVEYOR
SERIAL NOS. 79600 - 81399

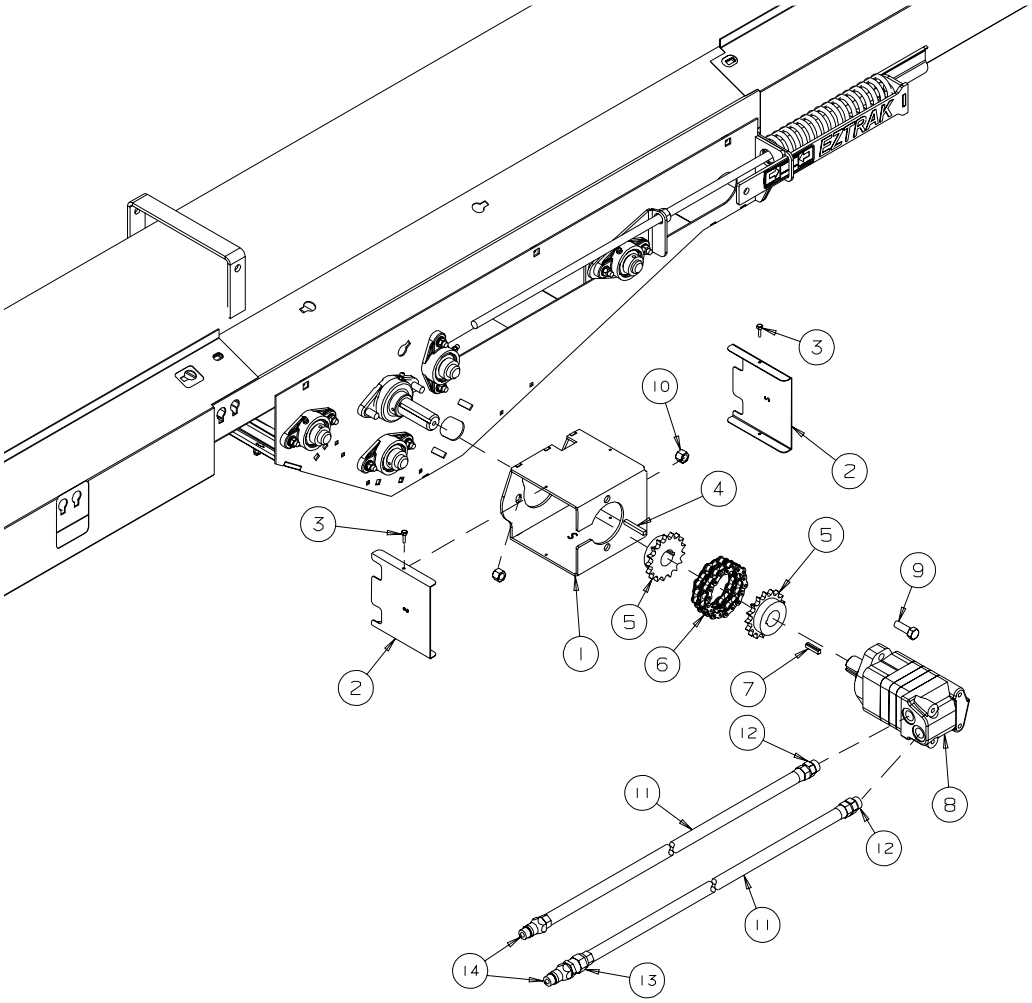

REF #	PART NO.	DESCRIPTION
1	C203111	Hydraulic Motor Mount
2	C203112	Hydraulic Motor Guard
3	B002036	#10 x 5/8” TEK Screw
4	C300708	1/4” x 1” Key
5	B009409	50- 17 Sprocket - 1 1/4” Bore
6	B009601	R50-2 Chain - 17 pitch
7	C200952	Offset Key - 1/4” x 5/16” - 1 1/4” lg.
8	B019047	Hydraulic Motor
9	B001041	1/2” x 1 1/2” Bolt
10	B001134	1/2” Stover Lock Nut
11	B0191477	1/2” Hydra. Hose X 25’ - 1/2” MPT x #10 FJIC
12	B0194345	#10 MORB x #10 MJIC Adapter
13	B019537	One Way Check Valve - 1/2” MPT x 1/2” FPT
14	B019200	Male Pioneer Tip - 1/2” FPT

WEASLER SERIES 14R
B003060 - BELT CONVEYOR - SIDE DRIVE

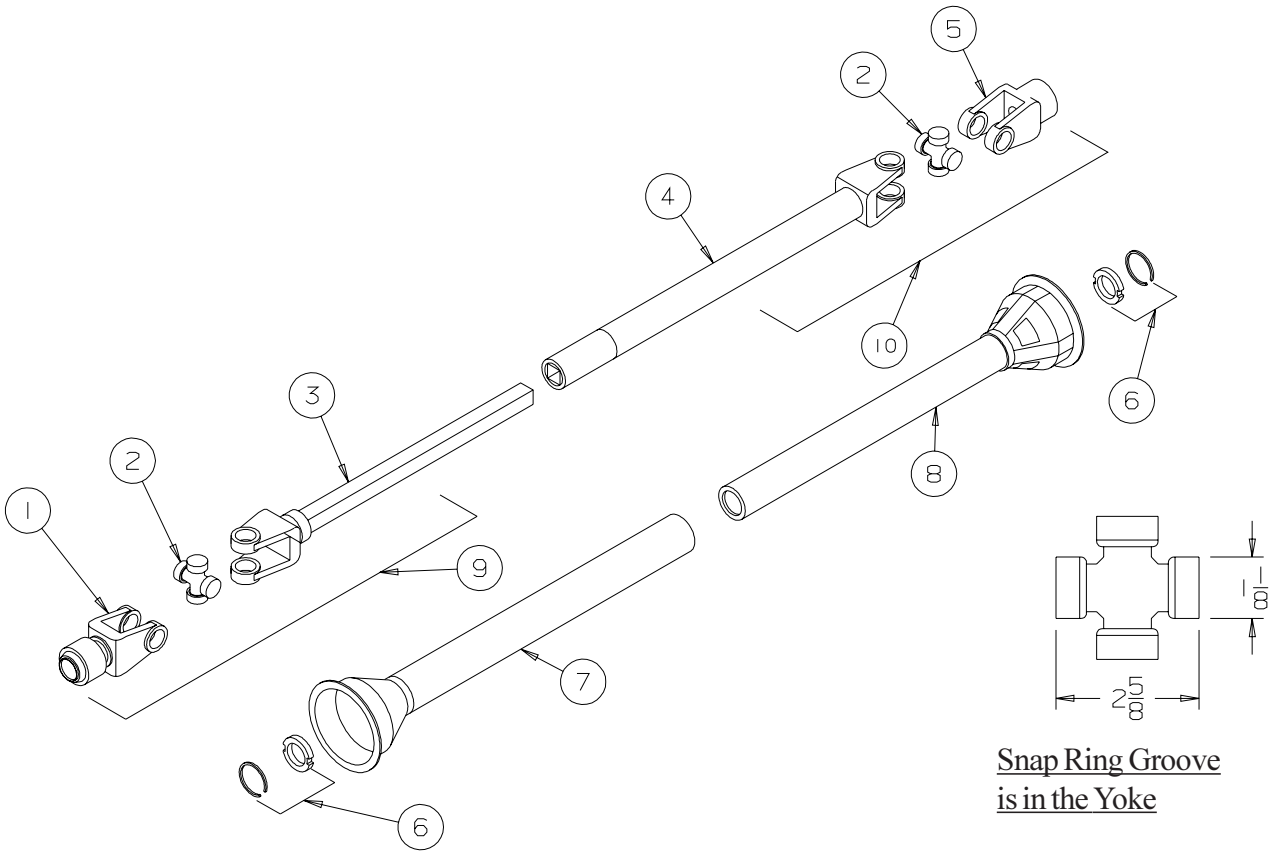

REF #	PART NO.	DESCRIPTION	QTY.
1	B003772	Tractor Yoke - 6 Spline	1
2	B0037101	Cross & Bearing Kit	2
3	B003853	Input Yoke & Shaft	1
4	B003854	Output Yoke & Tube	1
5	B003855	Implement Yoke - 1 1/2” Bore	1
6	B003776	Shield Bearing	2
7	B003857	Outer Shield	1
8	B003858	Inner Shield	1
9	B003850	Tractor Half of Shaft c/w Guard - 6 Spline	1
10	B003851	Implement Half of Shaft c/w Guard	1

WEASLER SERIES 14R
B0030605 - BELT CONVEYOR - PTO DRIVE CONNECTING SHAFT

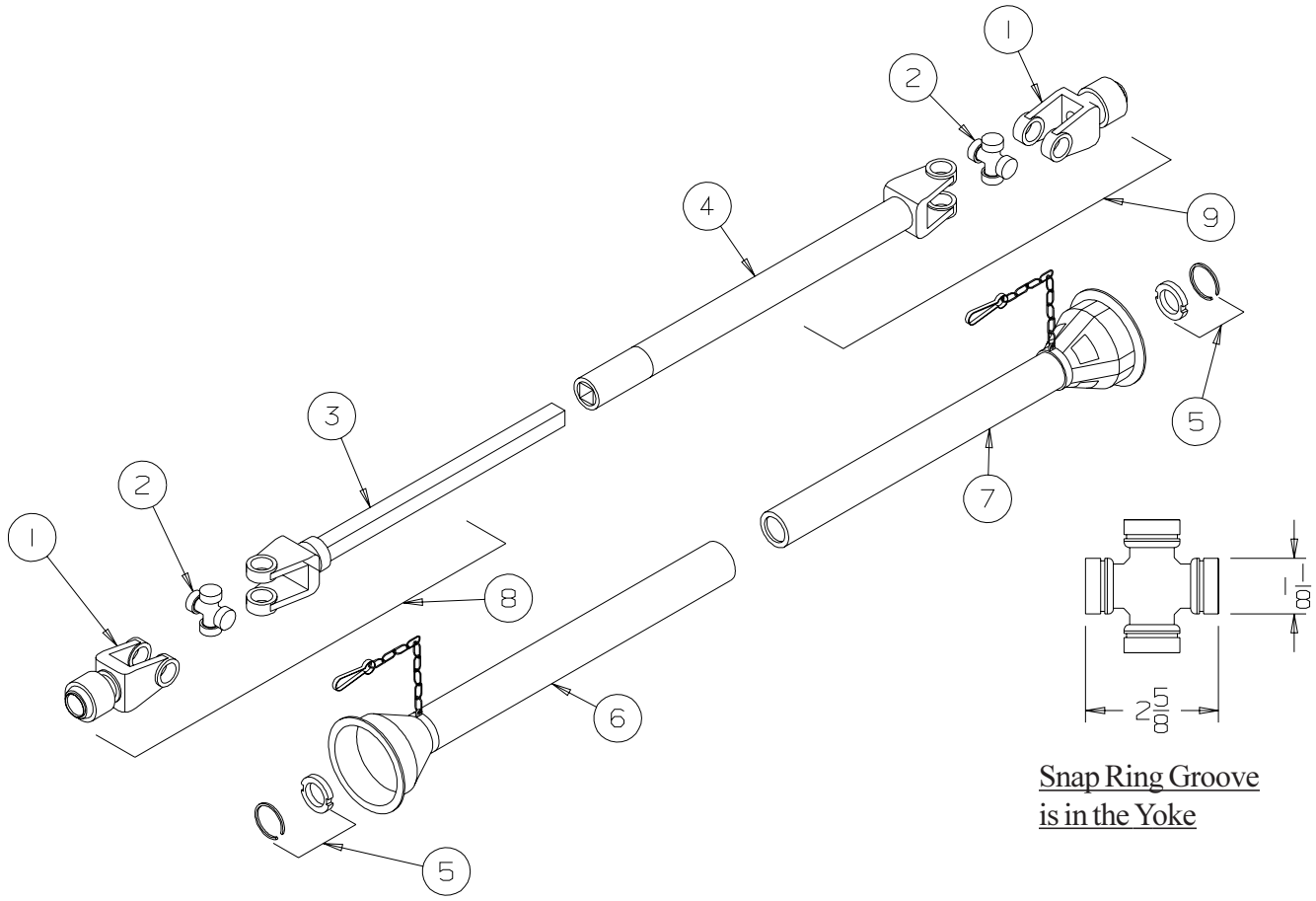

REF #	PART NO.	DESCRIPTION	QTY.
1	B003772	Yoke - 6 Spline	1
2	B0037101	Cross & Bearing Kit	2
3	B003923	Input Yoke & Shaft	1
4	B003924	Output Yoke & Tube	1
5	B003776	Shield Bearing	2
6	B003927	Outer Shield	1
7	B003928	Inner Shield	1
8	B003920	Shaft Half of Shaft c/w Guard - 6 Spline	1
9	B003921	Tube Half of Shaft c/w Guard - 6 Spline	1

WEIGHT TRANSFER KIT - GRAIN BELT CONVEYOR
SERIAL NOS. 79600 - 81399

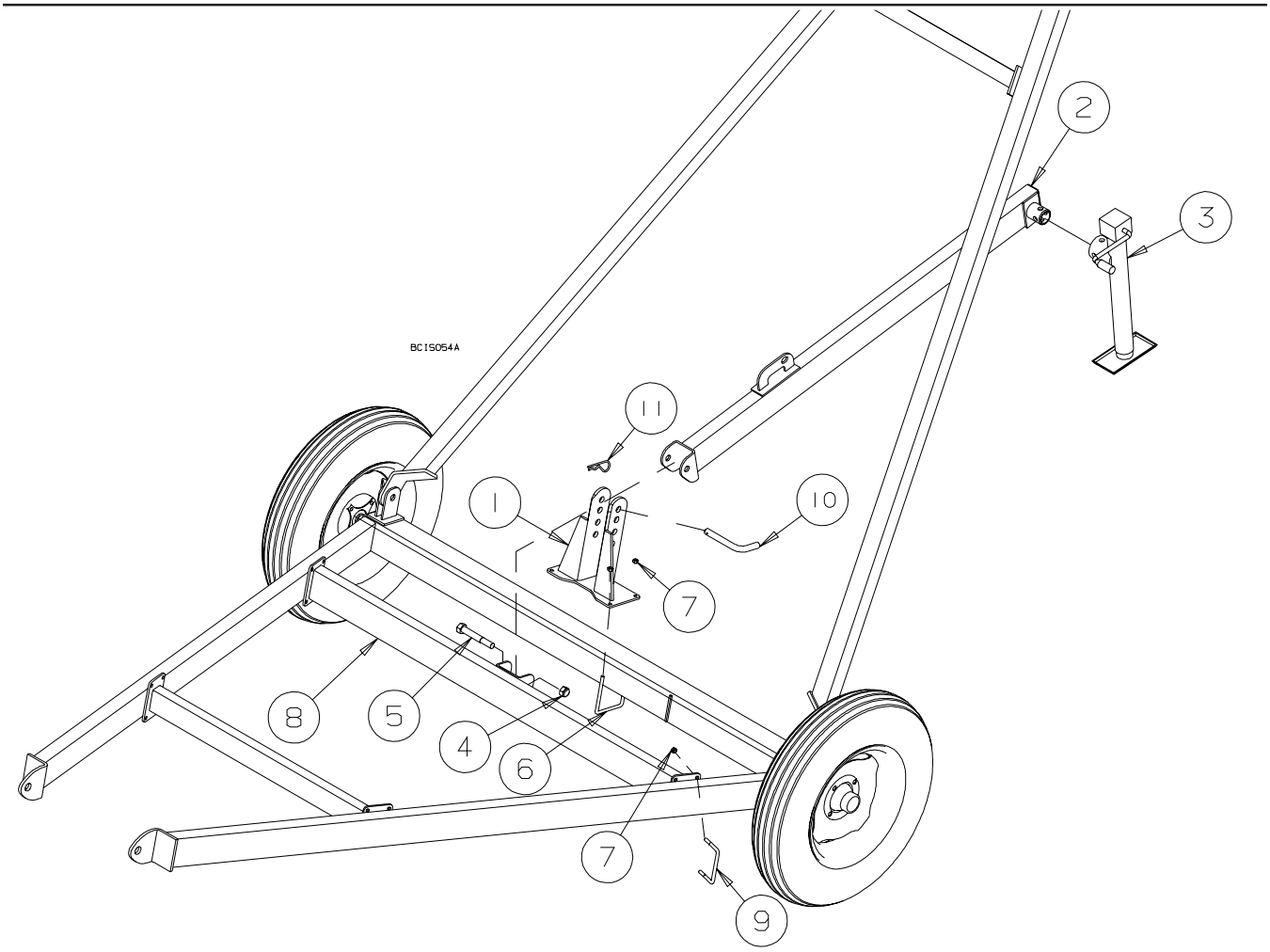

REF #	PART NO.	DESCRIPTION
1	C200955	WEIGHT TRANSFER PIVOT
2	C200957	WEIGHT TRANSFER ARM
3	B030520	IMPLEMENT JACK- 2000 LBS- 15” SIDE WIND
4	B001154	3/4” STOVER LOCK NUT
5	B001110	3/4”x 5” BOLT
6	B002016	3/8”x 4” U-BOLT x 5 5/8”
7	B011325	3/8” STOVER LOCK NUT
8	C201247	35’ WEIGHT CROSS
8	C201248	45’ WEIGHT CROSS
9	B0020162	3/8”x 4” U-BOLT x 3”
10	C201241	WEIGHT TRANSFER PIN
11	B002091	.177” x 3 3/4” HAIR PIN CLIP